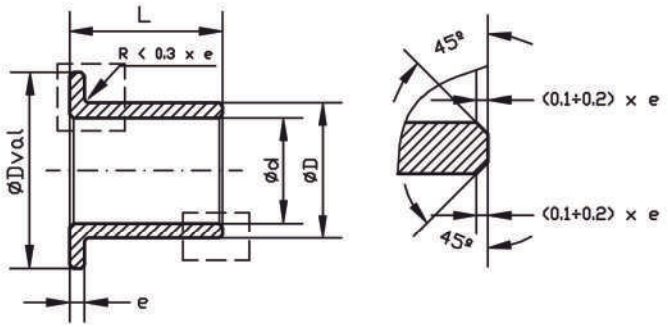

Code	ϕd	ϕD	ϕDval	e	Length (L)								
HB	6	10	14	2	6	10	16						
HB	8	10	16	2	12								
HB	8	12	16	2	8	12	16						
HB	10	12	14	1	17								
HB	10	13	16	1,5	10	12	16	20					
HB	10	15	20	2,5	10	16	20						
HB	10	16	22	3	10	16							
HB	12	15	18	1,5	12	16	20						
HB	12	17	22	2,5	12	16	25						
HB	12	18	24	3	12	20							
HB	14	18	22	2	14	18	22						
HB	14	20	26	3	14	18	22	28					
HB	15	19	23	2	16								
HB	15	20	25	3	6								
HB	15	21	27	3	16	25							
HB	16	20	24	2	16	20	25						
HB	16	22	28	3	16	20	25						
HB	18	22	26	2	18	28							
HB	18	24	30	3	18	22	28						
HB	20	24	28	2	10	16	20	25					
HB	20	26	32	3	16	20	25	32					
HB	22	27	32	2,5	18	22	28						
HB	22	28	34	3	6	25	30						
HB	22	28	35	3	6								
HB	22	29	36	3,5	18	22	28	36					
HB	25	30	35	2,5	20	25	32						
HB	25	32	39	2,5	20								
HB	25	32	39	3,5	20	25	32						
HB	25	38	50	5	65								
HB	28	33	38	2,5	28								
HB	28	36	44	4	22	28	36						
HB	30	38	46	4	20	25	30						
HB	32	38	44	3	20								
HB	32	40	48	4	20	25	30	32					
HB	36	42	48	3	22	28							
HB	36	45	54	4,5	22	36							
HB	40	46	52	3	25	32	40						
HB	40	50	60	5	25	32	40						
HB	45	51	57	3	28								
HB	45	56	67	5,5	45								
HB	50	56	62	3	32	40	50						
HB	50	60	70	5	32	40	50						
HB	60	70	80	5	50	60							
HB	70	80	90	5	65								